Stationary states of Jaynes-Cummings model with atomic center-of-mass quantum motion: direct comparison of standing-wave and counterpropagating-waves cases.

A. Zh. Muradyan[1,2], G. A. Muradyan[1]
[1] *Department of Physics, Yerevan State University, 1 Alex Manukian, Yerevan 375049 Armenia;*
[2] *Engineering Center of Armenian National Academy of Sciences, Ashtarak-2, 378410 Armenia;*
E-mail: muradyan@server.physdep.r.am

arXiv:quant-ph/0112164v1 26 Dec 2001

The eigenstate problem of the Jaynes-Cummings model on the basis of complete Hamiltonian, including the center-of -mass kinetic energy operator, is treated. The energy spectrum and wave functions in standing-wave (SW)- and counterpropagating waves (CPW)- cases are calculated and compared with each other. It is shown that in CPW-case i) the atomic momentum distribution is asymmetric and somewhat narrower in general; ii) the concept of quasimomentum is not applicable and instead the ordinary momentum concerns the problem; iii) atomic and photonic state distributions are self-consistent, and, in consequence iiii) mean number of photons in the counterpropagating traveling waves and mean atomic momentum match. Explicit analytic expressions for energy eigenvalues and eigenfunctions are found in Tavis -Cummings-type approximation [Phys. Rev. 170, 379(1968)] and is pointed, that it implies only the bounded-like states for atomic center-of-mass motion. It is also shown that if the recoil energy is taken into account, the Doppleron resonance is split into two branches, one of which diverges to Bragg-like resonance in the high-order range.

I. INTRODUCTION

The key scheme of cavity quantum electrodynamics (QED) [1], modern atom optics and interferometry [2] is the resonant interaction of an atom with cavity fields, created as standing or counterpropagating waves. The first type (with respective quantization on the SW basis) is attained in two plane-parallel-mirror cavities (in short, cavity), while the second type (with respective CPW-quantization) is attained in three or more mirror cavities (ring cavities). It is well known, in addition, that for classical picture of fields, these two representations are equivalent in the sense, that the SW can always be presented as a superposition of two counterpropagating travelling waves. In the quantum theory, nevertheless, they are divers [3], including the Hamiltonians of interaction. Hence it needs to be ascertained: are the diversities only quantitative or qualitative too, and how much are they for these or that circumstances and processes. Note, that it presents not only an academic interest, since in the microcavities ($V \precsim 10^{-3} cm^3$) several dozens of photons can induce strong optical nonlinearities for dipole-allowed optical transitions.

As far as we know, elucidation of physical aspects of mentioned incongruity had been done in paper [4], taking as an example the process of near-resonant coherent diffraction of atomic matter-waves by a space-periodic laser radiation field, known as near-resonant Kapitza-Dirac diffraction [5]. By means of numerical solution of the master equations for atomic probability amplitudes, the existence of evident differences between SW and CPW diffraction patterns was shown , in strictly quantum domain of cavity fields (the mean number of photons in cavities was chosen one). The physical reason of the difference also was presented. It is the behavior of momentum conservation law in relevant "atom + field " systems. This general principle ceases to apply in SW-case, because the atom changes its own momentum due to the interaction, while the SW-field does not. In contrary, in CPW-case both, atomic and field subsystems, change the momenta equally and in opposite directions, thereby conserving the systems total momentum. Already on the base of this sole difference can be anticipated a "soffer" diffraction for CPW-case with a respectively narrower distribution of states in the momentum space.

In this paper are considered the stationary states of the system "two-level atom + quantized field" in both SW and CPW-cases and the qualitative and quantitative differences between them are carried out in the range of quantum optics (the number of photons should be less than several tens). To this end the simplest theoretical model, the Jaynes-Cummings model (JCM) [6], including the quantized atomic center-of-mass motion [7], will be used. The spontaneous emission and other incoherent processes, as usual for this model, are omitted.

To make possible the direct comparison of these two concepts we, at first, represent detailed theory for stationary states of the systems at hand. Our representation for SW-case somewhat coincides with the picture in [8]. The preliminary analysis of the states and the comparison of the SW and CPW-cases are based on numerical solutions of the exact, as well as of the off-resonant approximate equations of atomic probability amplitudes in momentum space. An additional approximate analytical solution of the problem allows us to find out the parameters (terms),

determining the size of nonequivalency between the SW and CPW-spectrums and eigenfunctions in explicit form. The latter solutions pertain, however,only to bounded (wells' inner) atomic states.

The paper is organized as follows. Section II represents the basic model and the exact set of equations. Here we also give some numerical simulations of the problem, implemented for the sodium atom with $3S_{1/2} - 3P_{3/2}$ main transition. Section III represents the off-resonance and mentioned analytical approximations. In Section IV we examine the Bragg and Doppleron resonances, including the recoil energy terms. In Section V we consider the mechanisms responsible for the formation of stationary states from free definite-momentum ones. Conclusions and some short remarks about the subject are given in Section VI.

II. BASIC MODEL THEORY

We consider a two level atom of mass M and optical transition frequency ω_0, interacting with a quantized plane monochromatic field of frequency ω. We will restrict ourselves with two important cases of standing and counterpropagating waves. The longitudinal components p_x, p_y of the atomic center-of-mass (c.m.) momentum remain unchanged for perfectly plane fields, so that only the transverse atomic momentum $p_z = p$ needs to be considered. Since the incoherent processes are not included, the system is governed by the Schrodinger equation.

Let us first consider the CPW-case. The Hamiltonian in dipole and rotating-wave approximations is given by [4]

$$H = \frac{1}{2M}\widehat{P}^2 + \frac{1}{2}\left(1+\sigma_3\right)\hbar\omega_0 + \hbar\omega\left(a_1^+ a_1 + a_2^+ a_2\right)$$

$$+ \frac{1}{2^{3/2}}\hbar\Omega_0\left[\sigma_+\left(a_1\exp(ikz) + a_2\exp(-ikz)\right) + \sigma_-\left(a_1^+\exp(ikz) + a_2^+\exp(-ikz)\right)\right], \tag{1}$$

where $\widehat{\overline{P}} = -i\hbar d/dz$ is atomic momentum operator (1D), σ_3, σ_+ and σ_- are usual pseudospin atomic (Pauli) operators, $\widehat{a}_i$ and $\widehat{a}_i^+$ $(i = 1, 2)$ are annihilation and creation operators for two running wave modes, $k = \omega/c$. The factor Ω_0 in coupling constant is the vacuum Rabi frequency, and is connected with the atomic transition dipole moment d by relation $\Omega_0/2^{3/2} = -d(2\pi\omega/\hbar V)$, where V is the normalization (cavity) volume. The coherent binding between the internal and c.m. variables is by the Rabi frequency Ω_0, too.

The system under consideration has four degrees of freedom: two per atomic internal and 1D c.m. motions, and two per counterpropagating travelling waves. Three operators, forming together with the Hamiltonian the complete set of mutually commutative operators, are known and are the following: the excitation number operator

$$\widehat{N} = \frac{1}{2}\left(1+\sigma_3\right) + a_1^+ a_1 + a_2^+ a_2, \tag{2}$$

the total momentum operator

$$\widehat{P} = \widehat{p} + \hbar k\left(a_1^+ a_1 - a_2^+ a_2\right), \tag{3}$$

and the operator

$$\widehat{T} = \sigma_3 \exp\left(\frac{i\pi\widehat{p}}{\hbar k}\right), \tag{4}$$

which combines translational $\widehat{p}$ and dipole inversing σ_3 operators . Therefore $\widehat{H}, \widehat{N}, \widehat{P}$ and $\widehat{T}$ have compatible eigenvalues and a common system of eigenfunctions. Only these states, being the basic, should be considered thereafter in this paper. Any other state, of course in principle, can be presented via these eigenstates. Note, that sometimes the operator $\widehat{I} = \exp(i2\pi\widehat{p}/\hbar k)$ is used in related problems. However, $\widehat{I} = \widehat{T}^2$and can not be added into the set of mentioned operators or replace the operator $\widehat{T}$ there.

Out of a desire to better understand the future solutions and their connection with free-state values, which present a definite interest too, it may be worth to emphasize here that all three $\widehat{N}, \widehat{P}$ and $\widehat{T}$ operators don't contain the interaction parameter Ω_0. They are interaction independent. Their eigenvalues, denoted by N, P and T respectively, also are interaction independent. Therefore, any intermediate or final state, created from the initial one due to interaction should possess the same values of N, P and T as the free initial state. These ones, of course, don't need to be stationary in general, but may be such, if the interaction is adiabatic [9]. A sufficient condition for adiabatic following is the exceeding of the interaction switching on and switching off times (τ_{sw}), the inverse quantity of the

system's smallest characteristic frequency ($\Omega_{\min}^{-1}$). In the system at hand, as a such frequency appears the one-photon recoil frequency $\Omega_r = \hbar k^2/2M$. So for the interaction times essentially exceeding the recoil time Ω_r^{-1}, the atomic state evaluation is adiabatic with respect to both, internal and c.m., motions of the atom [10]. Failure of the adiabatic condition implies, respectively, that the population leaks into the immediate neighboring states, first of all into the translational states. Applying the general remarks to the system under consideration, we arrive to the possibility to treat the stationary states as attained adiabatically from some free initial state and then replace the set of N, P and T quantities by a new set of three related parameters of this initial state: atomic momentum p and the photon numbers $n_1$and n_2 in counterpropagating waves. One must keep in mind, however, that the mentioned replacement, which will be embodied soon, is substantial for adiabatically treated stationary states and is not obligatory even in this case.

Dirac notations $|l\rangle_1$ and $|m\rangle_2$ are used for quantized travelling-wave states (number states). Atomic internal ground and excited states are specified by $\begin{pmatrix} 0 \\ 1 \end{pmatrix}$ and $\begin{pmatrix} 1 \\ 0 \end{pmatrix}$ matrixes respectively, the c.m. states- by the function $\exp(ipz/\hbar)$. Hilbert space of the "atom+field" system is the direct sum of Hilbert spaces of atomic c.m. and internal motions, as well as of the field modes. Thereby, the nondegenerate wave function of the free system can be written as

$$\Psi_{free} = A\varphi_j \exp\left(\frac{ipz}{\hbar}\right) |l\rangle_1 |m\rangle_2 , \tag{5}$$

where A is the normalization constant, $j = g, e; \varphi_{g,e} = \begin{pmatrix} 0 \\ 1 \end{pmatrix}, \begin{pmatrix} 1 \\ 0 \end{pmatrix}$; $-\infty \leq p \leq \infty$ and $l, m = 0, 1, 2, \cdots$ in general. The seeking wave functions of the interacting system can be written as a superposition of (5)-type terms.

The general form of a wave function with a definite N ($\widehat{N}\Psi = N\Psi$) is

$$\Psi = \begin{pmatrix} 0 \\ 1 \end{pmatrix} \sum_{r=0}^{N} \int a_r(q,t) |r\rangle_1 |N-r\rangle_2 \exp\left(\frac{iqz}{\hbar}\right) dq$$

$$+ \begin{pmatrix} 1 \\ 0 \end{pmatrix} \sum_{r=0}^{N-1} \int b_r(q,t) |r\rangle_1 |N-1-r\rangle_2 \exp\left(\frac{iqz}{\hbar}\right) dq, \tag{6}$$

where a_r and b_r are arbitrary coefficients yet. Admissible solutions also should be normalized according to $\langle \Psi \mid \Psi \rangle = 1$. Note, that the excitation number N can be represented by means of the numbers n_1 and n_2 (see the remark above):

$$N = \left\{ \begin{array}{c} n_1 + n_2 \text{ for free ground level atom,} \\ n_1 + n_2 + 1 \text{ for free excited level atom.} \end{array} \right\}, \tag{7}$$

validity of which can be directly checked with the help of wave function (6).

For the next step we demand from Ψ to be the eigenfunction of total momentum operator $\widehat{P}$:

$$\widehat{P}\Psi = P\Psi. \tag{8}$$

Inserting (3) and (6) into (8) we arrive to equations

$$a_r(q,t) = a_r(t)\delta\left(q + (2r - N)\hbar k - P\right), \tag{9a}$$

$$b_r(q,t) = b_r(t)\delta\left(q + (2r + 1 - N)\hbar k - P\right), \tag{9b}$$

where $\delta(x)$ is the Dirac delta - function and $a_r(t)$ and $b_r(t)$ are the new coefficients. The eigenvalue P can be written as :

$$P = p + (n_1 - n_2)\hbar k, \tag{10}$$

where p is chosen the same for both, ground and excited atomic levels. Integration over q now yields to the following form:

$$\Psi = \begin{pmatrix} 0 \\ 1 \end{pmatrix} \sum_{r=0}^{N} a_r(t) \left|r\right\rangle_1 \left|N-r\right\rangle_2 \exp\left(\frac{i}{\hbar}(P-(N-2r)\hbar k)z\right) \tag{11}$$
$$+ \begin{pmatrix} 1 \\ 0 \end{pmatrix} \sum_{r=0}^{N-1} b_r(t) \left|r\right\rangle_1 \left|N-1-r\right\rangle_2 \exp\left(\frac{i}{\hbar}(P-(N-1-2r)\hbar k)z\right).$$

This form is already eigen-one for the operator $\widehat{T}$

$$\widehat{T}\Psi = T\Psi, \tag{12}$$

$$T = -\exp\left(\frac{i\pi}{\hbar k}\left(P - N\hbar k\right)\right) = -\exp\left(\frac{i\pi}{\hbar k}p\right). \tag{13}$$

Hence, the expression (11) is the eigenfunction of operators $\widehat{N}, \widehat{P}$ and $\widehat{T}$. Using(7), (10) and the second equation in (13), the latter three can be replaced by the initial values n_1, n_2 and p.

As it was previously stated, we are concentrating on the stationary states, where

$$a_r(t) = a_r \exp\left(-\frac{iEt}{\hbar}\right),\ b_r(t) = b_r \exp\left(-\frac{iEt}{\hbar}\right), \tag{14}$$

E being energy of the system.

After standard transformations the Schrodinger equation leads to following set of tridiagonal recurrence algebraic equations:

$$\left[E - N\hbar\omega - \left(P - (N-2r)\hbar k\right)^2/2M\right] a_r = \left(\hbar\Omega_0/2^{3/2}\right)\left[\sqrt{r}b_{r-1} + \sqrt{N-r}b_r\right], \tag{15a}$$

$$\left[E + \hbar\varepsilon - N\hbar\omega - \left(P - (N-1-2r)\hbar k\right)^2/2M\right] b_r = \left(\hbar\Omega_0/2^{3/2}\right)\left[\sqrt{r+1}a_{r+1} + \sqrt{N-r}a_r\right], \tag{15b}$$

where $r = 0, 1, 2, \cdots, N$ and $\varepsilon = \omega - \omega_0$ is the atom-field frequency detuning.

Equations (15a), (15b), as well as equations (18a) and (18b) for the SW-case, are the basis of the remainder of this paper. They determine the coefficients (probability amplitudes) a_r, b_r for ground and excited internal energy levels and the permitted values of energy E.

The set of Eqs. (15a), (15b) has $2N+1$ solutions $E_\nu(P,N)$, $\{a_r(\nu,P,N), b_r(\nu,P,N) \mid \nu = 0,1,2,...,2N\}$. $(N+1)$ of them may be interpreted as created adiabatically from initial states with a ground-level atom, and the other N ,as created respectively with an excited-state atom. For simplicity we suppress N, P and ν in probability amplitude and energy notations.

Rather than pursuing the governing equations in this CPW-case we now turn to another case, to SW-case. The respective Hamiltonian is [4]

$$H = \frac{1}{2M}\widehat{P}^2 + \frac{1}{2}\left(1+\sigma_3\right)\hbar\omega_0 + \hbar\omega a^+ a + \frac{1}{4}\hbar\Omega_0(\sigma_+ a + \sigma_- a^+)[\exp(ikz) + \exp(-ikz)], \tag{16}$$

where a and a^+ are now SW-mode annihilation and creation operators, obeying the same-type commutation relation $[a, a^+] = 1$ as the running modes. Note, that the coupling constant in this case is smaller by factor $2^{1/2}$ than in the former case.

The system "atom + SW" has three degrees of freedom, by one less than the system with CPW. The reason is, that the momentum $\widehat{P} = \widehat{p}$,and is not commutative with the Hamiltonian (16). Proceeding the same way as for (11) and (15a), (15b), we arrive to

$$\Psi = \begin{pmatrix} 0 \\ 1 \end{pmatrix} \left|N\right\rangle \sum_{l=-\infty}^{\infty} a_l(t) \exp\left(\frac{i}{\hbar}(p - 2l\hbar k)z\right) \tag{17}$$
$$+ \begin{pmatrix} 1 \\ 0 \end{pmatrix} \left|N-1\right\rangle \sum_{l=-\infty}^{\infty} b_l(t) \exp\left(\frac{i}{\hbar}(p - (2l+1)\hbar k)z\right)$$

for wave function, and

$$\left[E - N\hbar\omega - (p - 2l\hbar k)^2/2M\right] a_l = (\hbar\Omega_0/4)\sqrt{N}\left[b_{l-1} + b_l\right], \tag{18a}$$

$$\left[E + \hbar\varepsilon - N\hbar\omega - (p - (2l+1)\hbar k)^2/2M\right] b_l = (\hbar\Omega_0/4)\sqrt{N}\left[a_{l+1} + a_l\right] \tag{18b}$$

for probability amplitudes and energies. Here $l = 0, \pm 1, \pm 2, \ldots$, and the other notations are obvious. For adiabatically attained states

$$N = \left\{ \begin{array}{c} n \text{ for free ground level atom,} \\ n+1 \text{ for free excited level atom.} \end{array} \right\}. \tag{19}$$

Besides the apparent similarities, the basic sets of equations, (15a), (15b) and (18a), (18b), also have basic differences. While the first set is finite-size, the second one is infinite (even for $N = 1$, one-photon case). The next difference is in right-hand side coefficients. They are varied (r-dependent) for the first, but are constant for the second set. And the final difference, which already is conceptual and deserves a peculiar attention, is that the total momentum P in CPW-case, in contrast to its counterpart p in SW case, cannot be treated as a quasimomentum. This assertion immediately follows from the fact, that the replacing $P \to P + s2\hbar k$, with the relabeling $r \to r - s$ in (15a), (15b), s being an integer, conserves the left-hand side coefficients invariant, while the right-hand side coefficients get new values, leading thereby to other values for eigenenergies and probability amplitudes. Reminding that the physical reason of this difference is the participation of the momentum conservation law, we arrive at a conclusion that *the admission of the quasimomentum concept in space − periodic systems is conditioned by the failure of momentum conservation. There is no concept of quasimomentum in really closed systems conserving the total momentum.*

The main goal of the remainder of this section will be to illustrate the behavior of both systems via the results of numerical calculations. While the solutions of the CPW equations have been got exactly, to SW equations has been applied suitably truncated matrix diagonalization method. Solutions depend, except the number N of excitations (photons), upon the relative size of four parameters: the resonance detuning ε, vacuum Rabi-frequency Ω, transverse kinetic energy detuning $Pk/2M$ and photon-induced kinetic detuning, which is the recoil energy $E_r = (2\hbar k)^2/2M$ in $\hbar$ units . It is convenient to introduce dimensionless parameters, scaling the energies by the recoil energy E_r and all momenta - by one-photon-reemission recoil momentum $2\hbar k$. Then, as dimensionless parameter of interaction for both sets of equations appears

$$\xi = \hbar\Omega_0/2^{3/2}E_r. \tag{20}$$

The strength of coupling is essential already at $\xi \sim 1$. Let us for illustration take the sodium's atom with D_2 $(3S_{1/2} - 3P_{3/2})$ main transition and estimate the volume V of microcavity for which this is so, more definitely: $\xi_{Na} = 10$. Using the explicit expressions for Ω_0 and E_r we arrive at

$$\xi = \sqrt{\frac{3f}{2mV}}\frac{|e|\,M\lambda^2}{2\pi^2\hbar}, \tag{20a}$$

where f and λ are the oscillator strength and the wavelength of optical transition, m is the mass of electron. Inserting the values ($\lambda = 589 * 10^{-7}cm$, $M = 3.8 * 10^{-23}g$, $f = 0.655$) we get $V = 10^{-3}cm^3$. Note, that for cesium atom, with the analogous transition $6S_{1/2} - 6P_{3/2}$ and for the same volume of microcavity, the coupling strength is more than one order stronger, $\xi_{Cs} \approx 135$.

Figures 1a and 1b show the energy spectrum as a function of momentum for CPW and SW-cases respectively. In both cases $N = 6$, $V = 10^{-3}cm^3$, $\hbar\varepsilon/E_r = 250$, and the atom of Na is chosen. The comparison of figures clearly indicates the mentioned differences for energy spectrums: first, the number of energy branches is finite ($2N + 1 = 13$ *in chosen case*) for CPW-case, whilst it is infinite for SW-case (are presented only some lower branches); second, the CPW-spectrum is not repeated as $2\hbar k$ -wide zones, pointing out the failure of the quasimomentum concept in this case. The Figure 2 , plotted for the case $N = 12$, shows, as it was expected, approaching of the CPW-picture to the SW one. The flattening of lower curves signifies the transition of these states into the bounded-like states, for increased number of external photons. One can see, that the gaps between the energy zones are essentially wider in CPW-case. Also is seen the well known regularity, that the widths of the gaps between the nth and $(n+1)^{th}$ bands diminish with number n [11].

Probability amplitude distributions are shown in Figures 3a, 3b and 4a, 4b, respectively for $N = 6$ and $N = 12$ cases. As is seen from comparison of the graphs, in the first pair ($N = 6$ full quantum range) there is an apparent

discrepancy between CPW and SW-cases. In the second pair of graphs ($N = 12$) it is suppressed, but yet stays visible, even essential. The latter graphs also display the difference of momentum distributions for bounded-like (lower-laying levels) and free-like (upper laying levels) states.

The momentum distribution in bounded-like stationary states has a two-peak form. The peaks retire from each other for increasing energies, gradually being broader and losing in height. In free-like states , in contrast, the distributions are centered at the nonperturbed values (i.e. at $l = 0$ in SW-case). To avoid the eventual misunderstanding of depicted graphs, it needs to be noted that the momentum axes (abscissa) in these figures, as well as in the following ones for probability amplitude distributions, really contains only discrete values. Only for convenience of exhibition the neighboring points in graphs have been merged via the straight lines

III. OFF-RESONANCE APPROXIMATION AND TAVIS-CUMMINGS-TYPE ANALYTIC SOLUTION

In this section we examine the case, where the resonance detuning ε is much larger than any other above mentioned frequency; $\Omega_{0,}P(p)k/2M$ and $E_r/\hbar$. This case usually is regarded as adiabatic elimination, or off-resonance approximation [12]. In zero order for ε we obtain from (15b) and (18b) the equations

$$b_r \simeq (\Omega_0/2^{3/2}\varepsilon)\left[\sqrt{r+1}a_{r+1} + \sqrt{N-r}a_r\right], \tag{21}$$

$r = 0, 1, ..., N$

$$b_l \simeq (\sqrt{N}\Omega_0/4\varepsilon)\left[a_{l+1} + a_l\right], \tag{22}$$

$l = 0, \pm1, \pm2, ...$ respectively. This approximation, widely used in problems without the kinetic energy operator in Hamiltonian, calls for some comments here. The matter is, that for instance in SW-case, the term $(p-(2l+1)\hbar k)^2/2M$ already can exceed the any preliminarily given value $\hbar\varepsilon$. But it has to be taken into account, that the probability amplitudes, rather out of two-peaked range of distribution, are extremely small and can be put out of consideration. Then we arrive at the condition

$$|\varepsilon| \gg \frac{\sqrt{N}\Omega_0}{4}, \tag{23}$$

for implementation of the approximation, the same as the one without the kinetic energy operator: detuning of the resonance must be much greater than the optically induced inhomogeneous width of the transition.

By means of (21) and (22) the Eqs. (15a) and (18a) are being transformed into the recurrence equations only among the ground-level atomic amplitudes:

$$[E - N\hbar\omega - (P-(N-2r)\hbar k)^2/2M]a_r = \frac{\hbar\Omega_0^2}{8\varepsilon}(\sqrt{r(N-r+1)}a_{r-1} + Na_r + \sqrt{(r+1)(N-r)}a_{r+1}), \tag{24}$$

$$[E - N\hbar\omega - (p-2l\hbar k)^2/2M]a_l = \frac{\hbar\Omega_0^2 N}{16\varepsilon}(a_{l-1} + 2a_l + a_{l+1}). \tag{25}$$

This approximation preserves the nature of conjunctions between the neighboring ground level amplitudes: $l \to l \pm 1$. Therefore, we would expect that this approximation does not cause qualitative changes for ground level stationary states. But it, as a matter of fact, strongly depresses the excited-levels, created from the excited-level atomic states. The probability amplitudes, calculated on the basis of Eqs. (24) and (25), are plotted in Figures 5a and 5b. All the parameters are like in Figures 4a and 4b and have to fulfill the condition (23) ($|\varepsilon|/(\sqrt{N}\Omega_0/4) \simeq 58$): Note that the chosen value $|\varepsilon|$ is even larger than the natural linewidth of envisioned optical transition.

Unfortunately, even approximated Eq. (24) (or (25)) can not be solved analytically due to $(2r\hbar k)^2/2M$ terms, quadric relative to variable r (or l). To proceed, we make a new supplementary approximation, regarded to as a Tavis-Cummings-type approximation [13]. Presuming the $a_{r(l)}$-amplitude as a slowly varying function of r (l) , a permissible step for $N \gg 1$ and if other parameters are out of Bragg and Doppleron resonance conditions, this approximation envisages the variable r (l) as a continuous one. It should be expected, of course, to be a good approximation for $a_{r(l)}$, when the momentum distribution is rather dissipated.

Expanding the $a_{r\pm1}$ in a Taylor series up to the second order,

$$a_{r\pm1} = a_r \pm \frac{da_r}{dr} + \frac{1}{2}\frac{d^2a_r}{dr^2}, \tag{26}$$

and substituting this expression into the Eq. (24) (CPW-case) we get a second-order ordinary differential equation for the seeking probability amplitudes and energy values

$$\frac{d^2A(x)}{dx^2} - \frac{4}{N^2}\left(x - \frac{P}{2\hbar k} - r\right)\frac{dA_x}{dx} + \left\{4 + \frac{4E_r}{U}\left[\frac{E - N\hbar\omega}{E_r} - x^2\right]\right\}A(x) = 0, \tag{27}$$

where $x = (P/2\hbar k) + r - (N/2)$, $U = -(\hbar\Omega_0^2/4\varepsilon)$ and the new amplitude $A(x)$ is introduced by means of a relation

$$A(x) = \sqrt{r!(N-r)!}\; a_r. \tag{28}$$

The respective equation in SW-case is

$$\frac{d^2a(x)}{dx^2} + \left\{4 + \frac{4E_r}{U}\left[\frac{E - N\hbar\omega}{E_r} - x^2\right]\right\}\; a(x) = 0, \tag{29}$$

where $x = (P/2\hbar k) + l$, U being the same as in the previous case. The classical analog of U is the average potential energy of atomic c.m. in the light field.

Note, that the resulting Eqs. (27) and (29) are no longer equivalent to the preliminary Eqs.(24) and (25) and some specific quantum features of the atomic states may be lost (see in particular the last paragraph of Section IV).

Let us first consider the more simple SW-case (Eq. (29)). We restrict ourselves with the so called red-detuning case when $\varepsilon \prec 0$ ($U \succ 0$). Then the Eq.(29) is the equation for parabolic cylinder function $D_\nu(y)$ with a real argument. Its two independent solutions are [14]

$$a_1 = D_\nu(y), \qquad a_2 = D_\nu(-y), \tag{30}$$

where

$$y = 2\left(\frac{E_r}{U}\right)^{1/4} x = 2\left(\frac{E_r}{U}\right)^{1/4}\left(\frac{p}{2\hbar k} + l\right), \tag{31}$$

$$\nu = -\frac{1}{2} + \frac{E - N\hbar\omega + U}{\sqrt{E_r U}}, \tag{32}$$

The requirement for $D_\nu(\pm y)$ to be limited for any values of y (variable l) leads to a condition $\nu = n = 0, 1, 2, ...$ Then in accordance with (32), the energy gets only discrete values and is determined by the formula

$$E_n = N\hbar\omega - U + \sqrt{E_r U}\left(n + \frac{1}{2}\right). \tag{33}$$

Simultaneously both relevant parabolic cylinder functions turn to a Hermite polynomial $H_n(y/\sqrt{2})$ and as a sequence

$$a_{n,l} = \frac{C_n}{\sqrt{2^n n!}} H_n\left(\sqrt{2}\left(\frac{E_r}{U}\right)^{1/4}\left(\frac{p}{2\hbar k} + l\right)\right)\exp\left[-\sqrt{\frac{E_r}{U}}\left(\frac{p}{2\hbar k} + l\right)^2\right], \tag{34}$$

where C_n is a normalizing constant. It is worth to note that the size of quantization in (33) exactly copies the known frequency of time oscillations in the problem of atomic diffraction in the classical standing-wave field, taking into account the c.m. motion along the field direction.

In CPW-case, in distinction with SW-one, we arrive at

$$E_n = N\hbar\omega + \frac{P^2}{2M}\frac{1/N^2}{1/N^2 + E_r/U} - U + \frac{\hbar\Omega_0^2}{8\varepsilon} + \sqrt{\frac{\hbar^2\Omega_0^4}{16\varepsilon^2} + UE_r}\left(n + \frac{1}{2}\right), \tag{35}$$

and

$$a_{n,r} = C_n \frac{\exp\left[\frac{1}{N}\left(\frac{N}{2} - r\right)^2\right]}{\sqrt{r!(N-r)!}} H_n\left(\frac{y(r)}{\sqrt{2}}\right)\exp\left[-\frac{y^2(r)}{4}\right], \tag{36}$$

where

$$y\left(r\right)=2\left(\frac{1}{N^{2}}+\frac{E_{r}}{U}\right)^{1/4}\left(\frac{P}{2\hbar k}+r-\frac{N}{2}-\frac{1}{1/N^{2}+E_{r}/U}\frac{1}{N^{2}}\frac{P}{2\hbar k}\right). \tag{37}$$

CPW energy spectrum (35) has two distinguishing features in respect to SW spectrum (33). The first is, that the total momentum P enters into the expression of energy. This means that the atomic c.m. motion is not bounded in stationary states in general ($P\neq 0$), but keeps some one-sided mean velocity. States become bounded only in the limit $N^{2}\rightarrow\infty$, that is, in classical field limit. As a scale of this limit is claimed the ratio U/E_{r}. Taking into account the definition of U (just after Eq.(27)), the mentioned condition may be written in the form

$$N\gg\frac{\hbar\Omega_{0}^{2}}{4\left|\varepsilon\right|E_{r}}, \tag{38}$$

provided, of course, the condition (23). For $V=10^{-3}cm^{3}$ cavity the condition (38) is satisfied at $N\succcurlyeq 10$ for sodium atoms and at $N\succcurlyeq 50$ for cesium atoms.

The second difference of (35) relative to (33) is the size of quantization, emerging by the additional term $\hbar^{2}\Omega_{0}^{4}/16\varepsilon^{2}$ in square root expression. It has negligible influence in the viewed off-resonance approximation.

Evident differences occur in probability amplitudes. It is convenient to image the expression in (36) as a product of two parts; first, including the Hermite polynomial and second, the ratio of exponential to the square root of factorials. First part coincides with the (34), but is shifted relative it by

$$\frac{1}{1/N^{2}+E_{r}/U}\frac{1}{N^{2}}\frac{P}{2\hbar k}. \tag{39}$$

This shift has the same coefficient at $P/2\hbar k$ as the kinetic energy term in (35), and is not small in quantum optics range ($N\sim 10$ for off-resonance approximation). The second part, i.e. the additional ratio, is a symmetric function relative to point $r=N/2$, the form of which is presented in Fig.6 (for some values of N). As is seen, it can be viewed as unity in central region and decreasing near the edges of the definition range. Hence, the amplitude distribution in CPW-case, being product of two symmetric by itself, but shifted with respect to each other functions, is not, already, a symmetric one, as it was in CPW-case. It is symmetric only if $P=0$, but even in this case, the CPW distribution is somewhat narrower than the SW distribution. In analogy with energy spectrum, all differences disappear in the limit $N^{2}\rightarrow\infty$, where the counterpropagating light waves appear to a far detuned two-level atom as a sinusoidal potential, just similar to the standing light wave.

Figures 7a and 7b show the probability distributions calculated by means of formulas (36) and (34) respectively. All the parameters are like in Figures 5a and 5b. Comparison of Fig.7a with Fig.7b shows a small, almost imperceptible narrowing in each CPW-"mountain range". The mutual comparison of Figures 7a and 7b with Figures 5a and 5b corroborates the Tavis-Cummings-type approximation to be an acceptable tool in the range of bounded states. But it totally puts out of consideration all free or quasi-free states. In Fig.8a we present a similar to Fig.7a distribution, calculated for conditions more precisely satisfying Tavis-Cummings-type approximation ($N=24$). Its coincidence with the original, see Fig.8b, is of course better. However, it is to be memorized that the rising of N drifts the theory to the semiclassical domain of interactions.

IV. FORMATION OF STATIONARY STATES

Let us return to the theme of stationary states in the cases under consideration. Our objective is to clarify the ideas about the quantum contents of interaction mechanisms in SW and CPW-cases, to indicate the differences between them and already from this point, to understand the formation of stationary states from initially free states. To present them, we will first consider the SW-case. The variation of atomic c.m. motion in this case can be imagined as a diffraction of atomic matter waves on "frozen" immovable object: the standing wave grating. This is a fully classical-like phenomenon, provided by the matter-wave representation for atomic c.m. motion. The picture, that the scattering is a result of absorption and reemission of SW-photons should be regarded as a defective, since it does not answer to the question how the atomic momentum is changing due to these zero-momentum photons. This obstacle is overcame in the theory by the fact that the probability amplitude distribution a_{l} with $l=0,\pm 1,\pm 2,...$, as well as the amplitude distribution b_{l}, represent only the atomic states and do not concern to photons.

To realize the adiabatic evolution of the system from initially free state to the stationary coupling one, we assume the parameter Ω_{0} of the interaction to be a slow function of time, replace E by $i\hbar(d/dt)+E$ in (25) (in off-resonance

approximation) and view the a_l-amplitudes and the parameter E as a slowly varying in time quantities. After a phase transformation

$$\alpha_l = a_l \exp\left[-\frac{i}{\hbar}\left(E - N\hbar\omega - (p+2l\hbar k)^2/2M - \frac{\hbar\Omega_0^2 N}{8\varepsilon}\right)t\right], \tag{40}$$

we arrive at the equation

$$\begin{aligned}\frac{d}{dt}|\alpha_l|^2 = &-\frac{N\Omega_0^2}{8\varepsilon}(\cos(\nu_{l-1/2}t)\,\mathrm{Im}(\alpha_l\alpha_{l-1}^*) + \cos(\nu_{l+1/2}t)\,\mathrm{Im}(\alpha_l\alpha_{l+1}^*) + \\ &\sin(\nu_{l-1/2}t)\,\mathrm{Re}(\alpha_l\alpha_{l-1}^*) + \sin(\nu_{l+1/2}t)\,\mathrm{Re}(\alpha_l\alpha_{l+1}^*))\end{aligned} \tag{41}$$

for density matrix elements, which are more preferable for the putted objective. Here $\nu_l \equiv 2\hbar k(p+2l\hbar k)/M$ is the analog of Doppler frequency shift.

The equation (41) is, of course, too complicated to be inspected in general form, but we may consider the initial stage of interaction, taking in addition $\alpha_l(t=0) = \delta_{l,l_0}$. Then $\alpha_{l\pm1}$ are fully imaginary with $\mathrm{Im}\,\alpha_{l\pm1} \succ 0$ (for $\varepsilon \prec 0$) and the relative rate of depletion of the state with $l = l_0 - 1$ and $l = l_0 + 1$ is given by relative values of $\cos(\nu_{l_0-1/2}t)$ and $\cos(\nu_{l_0+1/2}t)$ respectively. If $p + 2l_0\hbar k \gtrless 0$, then $\cos(\nu_{l_0-1/2}t) \gtrless \cos(\nu_{l_0+1/2}t)$ and less modulo momentum states are being filled more rapidly than more modulo momentum states. As a result, the mean atomic momentum decreases gradually, gathering for asymptotically long times about the zero value. In attained stationary state, the mean atomic momentum approaches zero. Note, that this is a stimulated analog of well known Doppler cooling (slowing) of red-detuned atoms in the standing wave. The case of CPW we will start (and mainly restrict ourselves) by the immovable atom model (about commutative set of operators see in Appendix), since it gives an opportunity to present the additional mechanism for stationary state formation. Putting $M = \infty$ in Eqs. (15a) and (15b) and substituting the second into the first we readily arrive at equation

$$\frac{d}{dt}|\alpha_r|^2 = -\frac{\hbar\Omega_0^2}{4[E+\hbar\varepsilon - N\hbar\omega]}\left[\sqrt{r(N-r+1)}\,\mathrm{Im}(\alpha_r\alpha_{r-1}^*) + \sqrt{(r+1)(N-r)}\,\mathrm{Im}(\alpha_r\alpha_{r+1}^*)\right] \tag{42}$$

for density matrix elements, where

$$\alpha_r = a_r \exp\left[-\frac{i}{\hbar}\left(E - N\hbar\omega - \frac{\hbar^2\Omega_0^2 N}{8[E+\hbar\varepsilon - N\hbar\omega]}\right)t\right]. \tag{43}$$

Here, in contrast to SW-case, each atomic c.m. state is single-bonded with the pair of photon numbers in CPW. The mathematical response of this connection is that the a_r(and b_r) amplitudes are the representation of both atomic c.m. and photonic states simultaneously. The difference between the rates of $r \to r-1$ and $r \to r+1$ transitions now is determined by square roots $\sqrt{r(N-r+1)}$ and $\sqrt{(r+1)(N-r)}$. The former term represents the process of reemission of a photon from the first travelling wave, containing preliminary r photons, into the second one, with respectively $N-r$ photons, concomitantly altering the atomic momentum in $2\hbar k$. The second term represents the inverse process, i.e. the reemission of a photon from the second wave into the first wave, accompanying it with a $2\hbar k$ atomic momentum change. The physical reason of differences between the mentioned rates is solely the bosonic nature of photons. Direct comparison shows the dominance of reemission of photons from "more photon" wave into the "less photon" wave, which finally results in equalization of mean photon numbers in both counterpropagating travelling waves [15]. Hence, in attained stationary states the mean field momentum approaches zero.

Thus, both analyzed cases possess diverse mechanisms of approaching to stationary state, but the final results are similar in the sense, that since one of the coupling subsystems, atom or field, is "immovable" or "frozen", the mean momentum of the other subsystem unavoidably approaches zero. Speaking in fancy form, the "immovable" part of the system takes on itself the "surplus" of the momentum from the other subsystem. A clear and expected result. In CPW-case with a moving atom, however, this result is not the general case. The reason is the conservation of system's momentum. In this case the system evolves under action of both mechanisms. First of them, the diffraction, tends to suppress the mean atomic momentum, whilst second one, the bosonic nature, in contrary, tends to suppress the difference between the mean numbers of counterpropagating travelling waves. Since they are not possible simultaneously (except the case $P = 0$), in the course of time they mature the stationary states with definite, asymmetric in general, statistical distributions, where these tendencies are mutually compatible. The role of bosonic mechanism however is essential in the quantum-optic domain ($N \preccurlyeq 10$) and gradually diminishes out of it.

To conclude this section, we would like to make a notice about one unavoidable peculiarity of Tavis-Cummings-type approximation, with respect to adiabaticity of interaction. Taking the photon momentum as a continuous variable, we have suppressed the size of its quantum up to zero (as small as possible). Thereby we make feasible the arbitrary

small variations in the energy of atomic c.m. motion. As a consequence, any as small as possible variation of the field intensity (more concrete of parameter Ω_0) should cause changes in atomic c.m. motion and breaks down the adiabatic approximation. Because of this, the approximate solutions (34) and (36), in contrast to exact Eqs. (15a), (15b) or (18a), (18b), cannot be adiabatically related to the free system's state. Continuous quantum transition in atomic c.m. motion completely "washes out" the information about the initial state and its energy. Really, the switching off of interaction ($\Omega_0 \to 0$) in Tavis Cummings-type solutions leads to only one $E(\Omega_0) = N\hbar\omega$ value of energy and to one corresponding probability amplitude with $r = (N/2) + (P/2\hbar k)$ photons in the first travelling wave and the rest $N - r = (N/2) - (P/2\hbar k)$ photons in the second travelling wave. It is necessary, however, to clearly realize that the parameters n_1, n_2 and p preserve their physical essence as parameters of initial state; they are determined by the relations (7), (10) and (13) (in CPW-case) and are Ω_0-independent. Simply, the Tavis-Cummings-type approximation interrupts any, even adiabatic, connection of the stationary state with the initial one. The parameters n_1, n_2 and p can be used in this approximation as externally (additionally) given ones, and in case of necessity can be corroborated by means of exact equations.

V. BRAGG AND DOPPLERON RESONANCES

These resonances, Bragg and Doppleron, have been identified for an atom moving in a standing wave [16] and have got implementations in atom optics and laser cooling [17]. Here we would consider only the limit of small intensities, focusing on the role of multiphoton recoil energy.

Some preliminary words, for reminding, how these resonances are being extracted from equations. Thinking of the limit $\Omega_0 \to 0$ as a leading one to the initial state, one should put a corresponding condition on the initial state amplitudes. For example, if n_1 and n_2 photons in CPW and the atom is on the ground level, then $a_r = \delta_{r,n_1}, b_r = 0$. As a consequence, we get from (15a) the value of the free system energy,

$$E(\Omega_0 = 0) = p^2/2M + (n_1 + n_2)\hbar\omega. \tag{44}$$

Here the atomic momentum p is arbitrary. When in contrary, the limit $\Omega_0 \to 0$ is thought of as a transition to the final free state, we may only confirm the equality of energy to its (44) free value. It follows from the conservation of energy. Also taking into account the relations (7) and (10), from Eqs. (15a), (15b) we directly arrive at

$$(n_1 - r)\,(p + (-n_1 + r)\hbar k)a_r = 0, \tag{45}$$

or

$$(\omega - \omega_0 - (2n_1 - 2r - 1)\,kp/M - (2n_1 - 2r - 1)^2\,\hbar k^2/2M)b_r = 0. \tag{46}$$

The solution with $r = n_1$ and respectively $a_{n_1} = 1, a_{n\neq n_1} = 0, b_r = 0$, returns the system into the initial state. The next solution with

$$p = (-n_1 + r)\,\hbar k \tag{47}$$

gives a sole nonzero value for $a_{r=n_1+p/\hbar k}$ ground-level amplitude. Corresponding to this case final atomic momentum (see the wave function (11)) $p_f = P + (N - 2r)\,\hbar k = p + 2\,(n_1 - r)\,\hbar k = -p$, which is the condition for Bragg scattering.

The third possible solution of (45) and (46) occurs at

$$\omega - \omega_0 = (2n_1 - 2r - 1)\,kp/M + (2n_1 - 2r - 1)^2\,\hbar k^2/2M \tag{48}$$

and has a sole nonzero solution for the corresponding excited-level amplitude b_r. This is the case of Doppleron-resonance scattering, when the atom leaves the zone of interaction on excited energy level [18].

Let us stop our attention on Doppleron-resonance condition (48) in order to examine the behavior of final momentum p_f versus the initial momentum p. To this end the condition (48) may be viewed as a dependance of r on p and then put into the excited-atom final momentum expression $p_f = P + (N - 1 - 2r)\,\hbar k = p + (2n_1 - 1 - 2r)\,\hbar k$. Computation gives

$$p_f = -p\sqrt{1 + 2M\hbar\,(\omega - \omega_0)\,/p^2}, \tag{49}$$

where the atomic initial momentum satisfies the Doppleron resonance condition (48). For a fixed frequency value ω the allowed values of initial momentum p constitute a discrete set, corresponding to the integer values of $(2n_1 - 2r - 1)$ in (48).

Graphs of (49) are plotted in Fig.9. For comparison we also plot the graphs without the recoil energy term (the last one in (48)). As we can see, the presence of recoil energy dramatically changes the character of $p_f(p)$ dependance. The first distinctive feature is in splitting of possible values of p_f for every p into two branches, herewith converging the high-order resonances ($p^2/2M \gg \hbar\,|\omega-\omega_0|$) to the Bragg resonances ($p_f=-p$) in the additional branch. The second difference is the lack of resonances in small atomic momentum range ($p^2/2M \prec \hbar\,|\omega-\omega_0|$) and connected with it, the convergence of p_f to zero at the limiting point with $p^2/2M=\hbar\,|\omega-\omega_0|$. It means that the inherent possibilities of the Doppleron-cooling really are more than it follows from the theory, not including the recoil energy term.

VI. CONCLUSIONS

We analyze the stationary states of JCM with SW and CPW fields, treating the external, as well as the internal, atomic coordinates quantum-mechanically. The inspection shows essential deviations between SW- and CPW-cases in quantum optics range ($N \prec 20$), which first of all have qualitative character. As a such matter can be noted the deterioration of the concept of quasimomentum, the asymmetry and narrowing of momentum distribution, the coincidence of photonic and atomic momentum distributions in CPW-case.

Since the physical reason of the mentioned differences is the existence of the momentum conservation, it can be concluded that the modern cavity QED an the theory of measurement, being developed on the base of quantized SW-cavities, in fact have only dealt with the conservation of energy. The cavity QED and related problems for ring cavities, where the momentum conservation exists too and has to alternate the state-pattern in "atom+field" system, need a performance, yet. Moreover, the experimental confirmation just of CPW-case regularities, stationary or not, may be adopted as the direct nonmediated evidence for the photon momentum to be quantized.

Reexamination of kinematic resonances shows that due to recoil energy term the Doppleron-resonance splits into two branches and , which is more important, can not take place in the range of small incident kinetic energies (where $|p| \prec \sqrt{2M\hbar\,|\omega-\omega_0|}$).

This work was supported by ISTC Grant A - 215 - 99.

VII. APPENDIX

The case of immovable atom ($\widehat{p}^2/2M=0$) is a separate one for stationary state problem and its analysis is not logical on the basis of Eqs. (15a), (15b). The reason for such a separation is that the $\widehat{P}$ and $\widehat{T}$ operators loose the inherent physical contents and must be omitted. Instead of them enters a new, commutative with $\widehat{H}$ and $\widehat{N}$ photonic operator

$$\widehat{\theta}=(a_1^+a_1+a_2^+a_2-a_1^+a_2-a_2^+a_1)/2N, \tag{A1}$$

which has the eigenstates $\theta_m=1-m/N$, $m=0,1,2,\cdots,N$.

It is referred to as an operator of interference, in the sense that its eigenvalues play the same role in the quantized-field picture as the term cos^2kz in the classical field picture of interaction [16].

[1] S. Haroche and J.M. Raimond, Adv. Atom. Mol. Phys. 20, 347 (1985); H. Yoo and J.H. Eberly, Phys. Rep. 118, 239 (1985);P. Meystre, Phys. Rep. 219, 243 (1992); A.I. Lvovsky, H. Hansen, T. Aichele, O. Benson, J. Mlynek and S. Schiller, Phys.Rev.Lett. 87, 050402 (2001).

[2] C.B. Adams, M. Sigal and J. Mlynek, Phys. Rep. 240, 143 (194); Ed. by P.R. Berman, Atom Interferometry (Acad. Press, Cambridge, 1997).

[3] C. Cohen-Tannoudji, J. Dupont-Roc and G. Grynberg, Photons and Atoms, Introduction in Quantum Electrodynamics (Wiley, New York, 1989).

[4] B.W. Shore, P. Meystre, and S. Stenholm, J. Opt. Soc. Am. B. 8, 903 (1991).

[5] R.J. Cook and A.F. Bernhardt, Phys. Rev. A 18, 2533 (1978); A.P. Kazantsev and G.I. Surdutovich, Sov. Phys.-Pis'ma JETP 31, 542 (1980); P. Meystre, E. Schumacher and S. Stenholm, Opt. Commun. 73, 443 (1989); A.Zh. Muradyan, Sov Phys.-Izvestia AN Arm. SSR, Fizika 10, 361 (1975); P.J. Martin, P.L. Gould, B.G. Oldaker, A. Miklich and D.E.

Pritchard, Phys. Rev. A 36, 2495 (1987); G.S. Agarwal and K. Moelmer, Phys. Rev. A 47, 5158 (1993); M. K. Oberthaler, R. Abfalterer, S. Bernet, C. Keller, J. Schmiedmayer and A. Zeilinger, Phys. Rev. A 60, 456 (1999); Yu. B. Ovchinnikov, J.H. Muller, M.R. Doery, E.J.D. Vredenbregt, K. Holmerson, S.L. Rolston and W.D. Phillips, Phys.Rev. Lett. 83, 284 (1999).

[6] E.T. Jaynes and F.W. Cummings, Proc IEEE 51, 89 (1963); J.H. Eberly, N.B. Narozhny and J.J. Sanchez - Mondragon, Phys. Rev. Lett. 33, 1323 (1980); G. Rempe, H. Walter and N. Klein, Phys. Rev. Lett. 58, 353 (1987); V. Buzek, H. Moya-Cessa and P.L. Knight, Phys. Rev. A 45, 8190 (1992); B.W. Shore and P.L. Knight, J. Mod. Opt. 40, 1195 (1993); S.M. Barnet and P.M. Radmore, Methods in Theoretical Quantum Optics (Clarendon Press, Oxford, 1997).

[7] G. Compagno, J.S. Peng and F. Persico, Phys. Rev A 26, 2065 (1982) M. Lewenstein, L. You, J. Cooper and K. Burnett, Psys.Rev. A 50, 2207 (1994); M. Freyberber, A.M. Herkommer, D.S. Krahmer, E. Mayr and W.P. Schleich, Adv.Atom. Molec. Opt. Phys. 41, 143 (1999).

[8] M. Wilkens, E. Schumacher, and P. Meystre, Phys. Rev. A 44, 3130 (1991).

[9] A. Messiah, Quantum Mechanics (Wiley, New York, 1962); L.I. Schiff, Quantum Mechanics (McGraw-Hill, New York, 1968), p. 289.

[10] P. Marte, P. Zoller and J.H. Hall, Phys.Rev. A 44, R4118 (1991); J. Lawall and M. Prentiss, Phys. Rev. Lett. 72, 993 (1994), L.S. Goldener, C. Gertz, R.J.C. Spreeuw, S.L. Rolston, C.I. Westbrook and W.D. Phillips, Phys. Rev. Lett. 72, 994 (1994); P.D. Featonby, G.S. Summy, J.L. Martin, H.Wu, K.P. Zetie, C.J. Foot and K. Burnett. Phys. Rev. A 53, 373 (1996).

[11] See for example M.R. Doery, E.J.D. Vredenbregt and T. Bergeman, Phys. Rev. A 51, 4881 (1995).

[12] See for example S. Dyrting and G.J. Milburn, Phys. Rev. A 49, 4180 (1994); Y. Castin and K. Molmer, Phys. Rev. Lett. 74, 3772 (1995).

[13] M. Tavis and F.W. Cummings, Phys. Rev. 170, 379 (1968); E. Arimondo, A. Bambini and S. Stenholm, Phys. Rev. A 24, 898 (1981).

[14] H. Bateman and A. Erdeyli, Higher Transcendental Functions (New York - London, 1953).

[15] V.M. Arutyunyan and A.Zh. Muradyan, Sov. Phys.-Kvantovaja Elektronika 20, 856 (1993).

[16] A.F. Bernhardt and B.W. Shore, Phys. Rev. A 23, 1290 (1981).

[17] See for example B.W. Shore, P. Meystre and S. Stenholm, J. Opt. Soc. Am. B2, 1799 (1985); T. Zaugg, P. Meystre, G. Lenz and M. Wilkens, Phys. Rev. A 49, 3011 (1994).

[18] P.R. Berman and J. Ziegler, Phys. Rev. A 15, 2042 (1977); E. Kyrola and S. Stenholm, Opt. Commun. 22, 123 (1997); J. Reid and T. Oka, Phys. Rev. Lett. 38, 67 (1977).

FIG. 1. Dispersion curves of the atomic c.m. quantum motion in counterpropagating waves (a) and standing wave (b) quantized cavity fields with $N = 6$ photons. The chosen parameters are $\hbar\varepsilon/E_r = -250$, $\xi = \hbar\Omega_0/2^{3/2}E_r = 1.75$. The latter corresponds to $3S_{1/2} - 3P_{3/2}$ optical transition of sodium atom located in a $V = 10^{-3}cm^3$ quantum cavity. $n = 1, 2, ...$ on curves labels the number of energy zone. The lowest states, up to $n = 4$, are shown. CPW-curves (a), in distinction to SW-ones, aren't periodic and, as a result, the concept of quasimomentum can not be introduced for them. The energy distance between the $n = 1$ and $n = 2$ curves, that is the width of first energy band, is much wider in CPW-case than in SW-case.

FIG. 2. Dispersion curves of the atomic c.m. quantum motion in counterpropagating waves (a) and standing wave (b) quantized cavity fields with $N = 12$ photons. The other parameters are like in Fig.1. The wider widths of energy bands in CPW-case still is aparent. The second band between $n = 2$ and $n = 3$ zones is clearly seen in CPW-case, whilst in SW-case it is not.

FIG. 3. Distribution of the atomic c.m. momentum states over the energy spectrum. The probabilities are presented on vertical axes. The momenta are on the frontal axes and are presented in $p_r = 2\hbar k$ units. The energies are presented without photonic field energy in $E_r = (2\hbar k)^2/2M$ recoil energy units. The total momentum P (quasimomentum p) of "atom +cavity field" system is chosen zero. The other parameters are like in Fig.1. The values of energy are quantized and depicted by dark lines on both graphs. The spectrums of momenta are quantized too, but for sake of simplicity of exhibition we connect the neighboring points in both momentum and energy directions. The lower-laying energy levels are created from ground-level free atomic states, and the upper-laying ones are from excited-level free atomic states. The energy spectrum of CPW-case (a) is not truncated, whilst the spectrum of SW-case (b) in reality is infinite and we exhibit only some truncated parts for both, lower-laying and upper-laying families. Finally the distributions in a form of expanding hills pertain to quasi-bounded states; the others are localized near the zero-momentum values and represent the quasi-free states.

FIG. 4. Distribution of the atomic c.m. momentum states over the energy spectrum for $N = 12$ photons in cavities. The parameters are like in the previous figure. The momentum distributions in bounded states are somewhat wider than in previous $N = 6$ case. The distinction of CPW-case (a) from SW-case (b) is essential yet.

FIG. 5. The same momentum distribution as in Fig.4, but calculated in off-resonance approximation. Excited-state energy levels are escaped, of course, while the ground-state energy levels and c.m. momentum distributions practically coincide with the corresponding results in Fig.4.

FIG. 6. The function-factor, which determines the form distinction of c.m. momentum distribution in CPW-case with respect to SW-case (in Tavis-Cummings approximation), as function of number r of photons in one of the counterpropagating waves.

FIG. 7. Atomic c.m. momentum distribution in Tavis-Cummings approximation for CPW (a) - and SW (b) -cases. The parameters are taken from Fig.5. The continuous spectrum absent in this approximation and the difference between CPW- and SW-cases is notable only for upper-levels.

FIG. 8. Momentum distribution for atomic c.m. quantum motion in off-resonance and Tavis-Cummings approximations with $N = 24$ photons in cavities. As was expected the coincidence is better (with the lower bounded states) than in the previous $N = 12$ case, but is not appropriate for quantitative calculations.

FIG. 9. Final atomic momentum as a function of initial (incident) momentum for Doppleron-resonance conditions with (solid line) and without (dashed line) recoil energy term. The graphs are depicted as continuous ones (instead of discrete point sequences) only for the sake of simplicity.

a

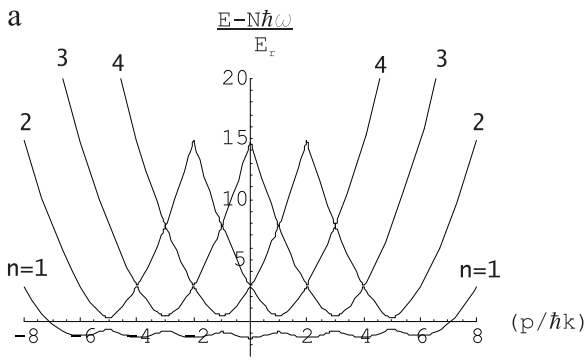
E−Nħω / E_r
20
15
10
5
n=1
2
3
4
4
3
2
n=1
−8
−6
−4
−2
2
4
6
8
(p/ħk)

b

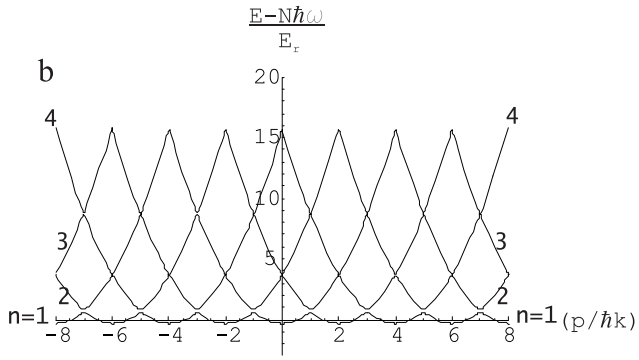
E−Nħω / E_r
20
15
10
5
4
3
2
n=1
4
3
2
n=1
−8
−6
−4
−2
2
4
6
8
(p/ħk)

a

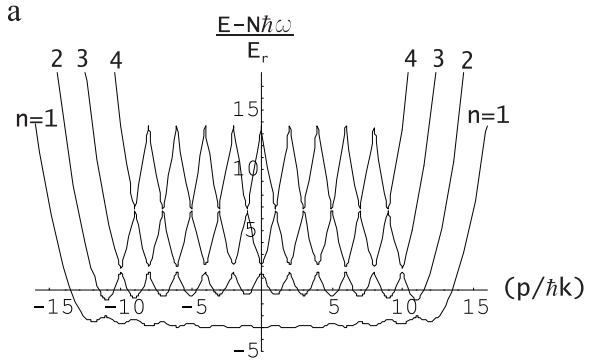
E−Nℏω / E_r
2 3 4
4 3 2
n=1
n=1
15
10
5
−5
−15 −10 −5 5 10 15
(p/ℏk)

b

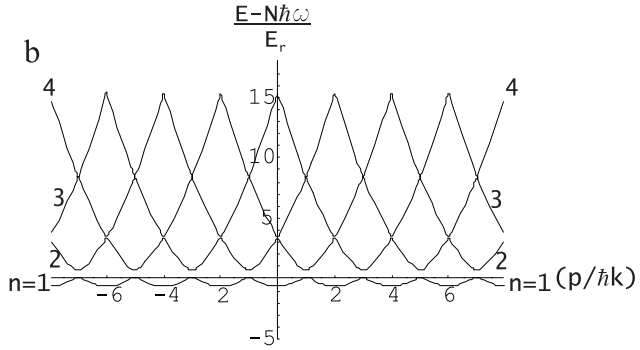
E−Nℏω / E_r
4
4
3
3
2
2
n=1
n=1
15
10
5
−5
−6 −4 2 2 4 6
(p/ℏk)

a

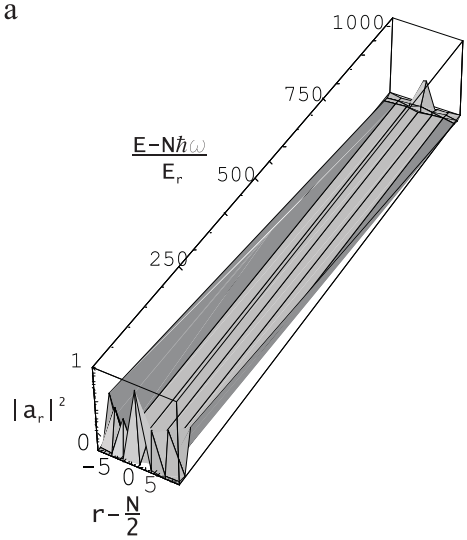
1000
750
500
250
$\frac{E-N\hbar\omega}{E_r}$
1
0
$|a_r|^2$
-5
0
5
$r-\frac{N}{2}$

b

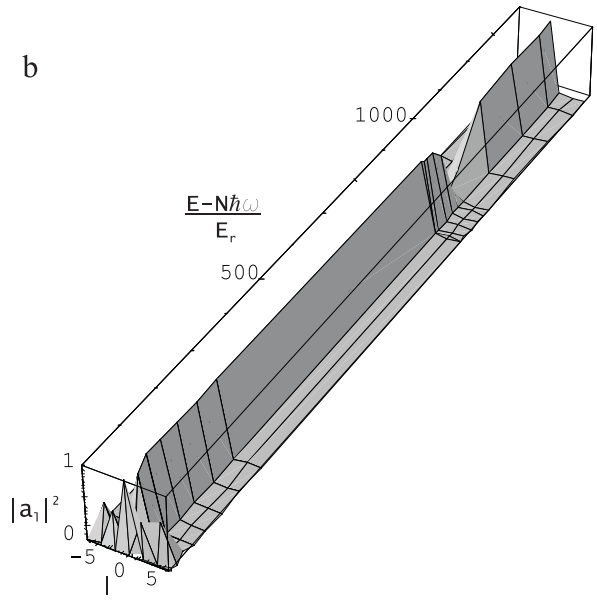
1000
500
$\frac{E-N\hbar\omega}{E_r}$
1
0
$|a_l|^2$
-5
0
5
l

a

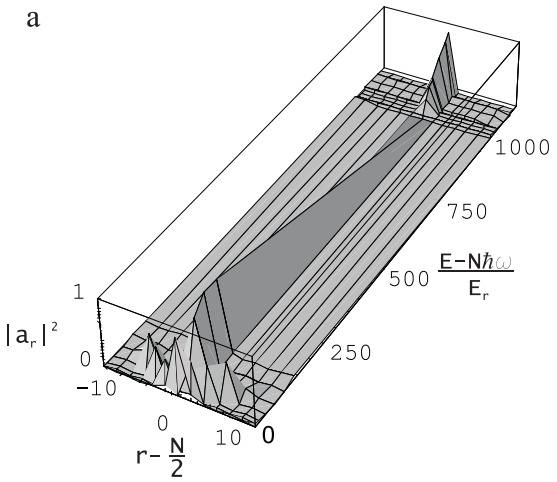
1000
750
500
250
0
$\frac{E-N\hbar\omega}{E_r}$
1
$|a_r|^2$
0
-10
0
10
$r-\frac{N}{2}$

b

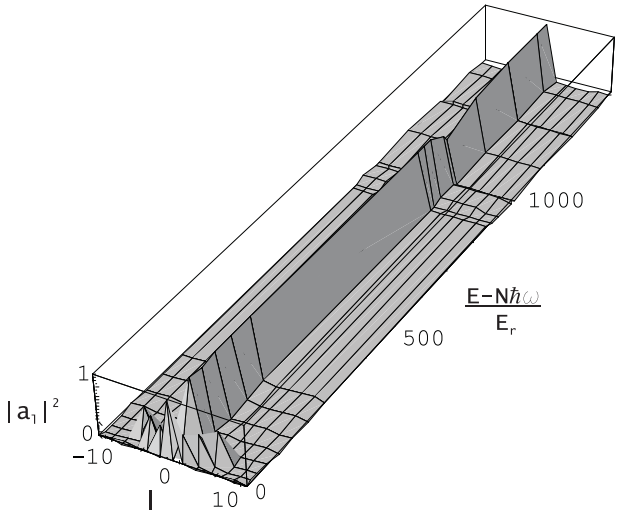
1000
500
0
$\frac{E-N\hbar\omega}{E_r}$
1
$|a_l|^2$
0
-10
0
10
l

a

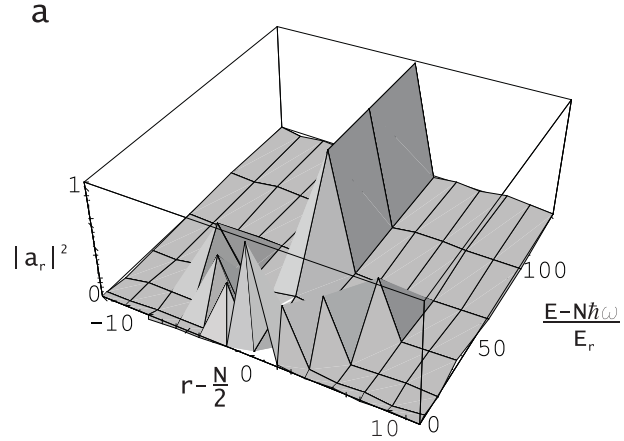
1
$|a_r|^2$
0
-10
$r-\frac{N}{2}$
0
10
0
50
100
$\frac{E-N\hbar\omega}{E_r}$

b

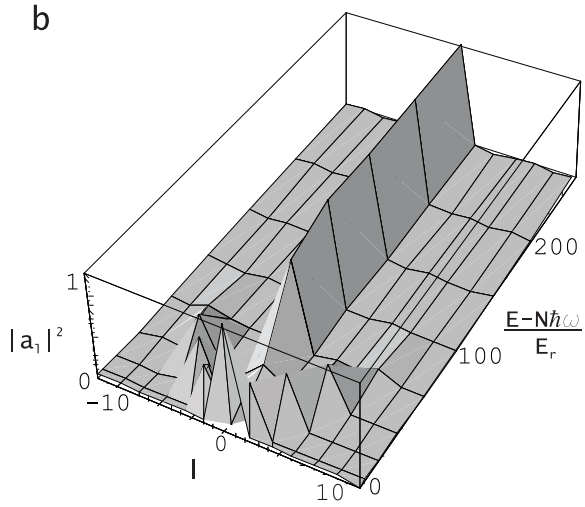
1
$|a_l|^2$
0
-10
0
l
10
0
100
200
$\frac{E-N\hbar\omega}{E_r}$

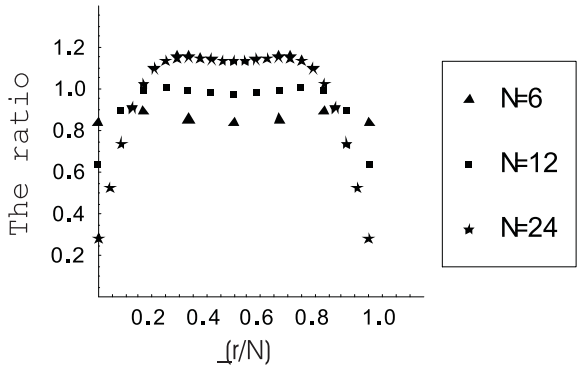
The ratio
1.2
1.0
0.8
0.6
0.4
0.2
0.2
0.4
0.6
0.8
1.0
(r/N)
N=6
N=12
N=24

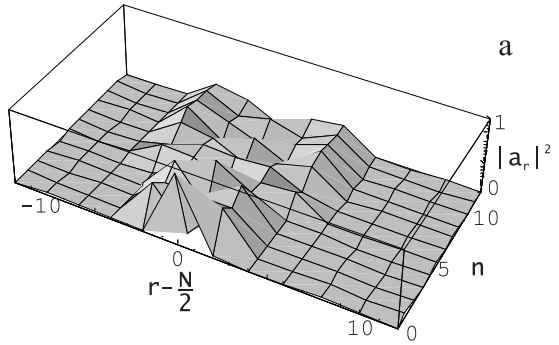
a
1
$|a_r|^2$
0
10
5
n
0
10
0
-10
$r-\frac{N}{2}$

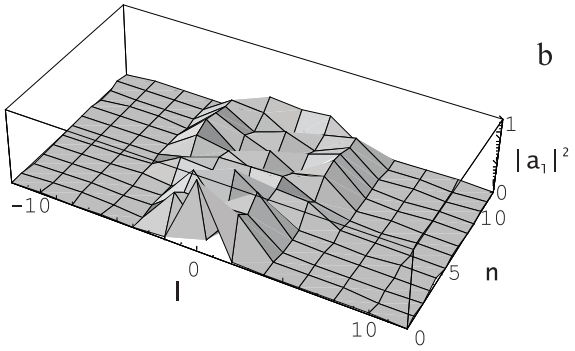
b
1
$|a_l|^2$
0
10
5
n
0
10
0
-10
l

a

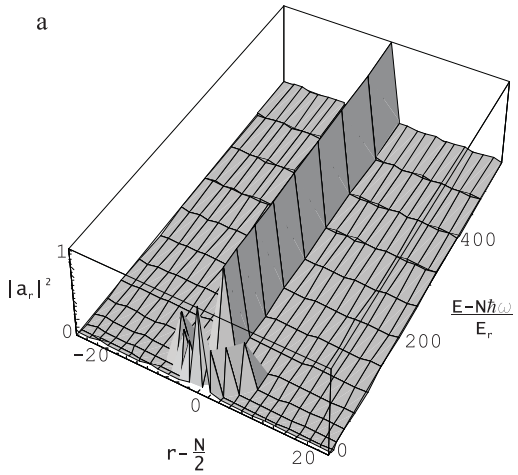
1
$|a_r|^2$
0
-20
0
20
$r-\frac{N}{2}$
0
200
400
$\frac{E-N\hbar\omega}{E_r}$

b

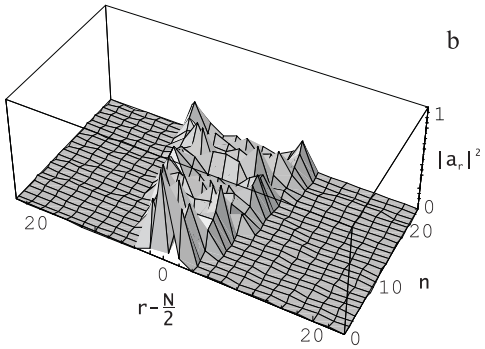
1
$|a_r|^2$
0
20
0
20
$r-\frac{N}{2}$
0
10
20
n

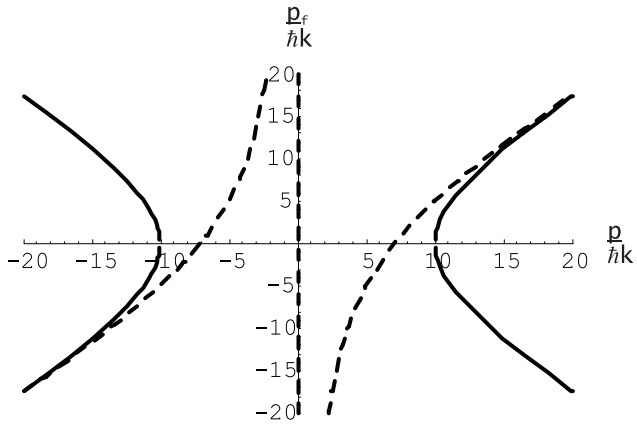
$\frac{p_f}{\hbar k}$
20
15
10
5
-5
-10
-15
-20
-20
-15
-10
-5
5
10
15
20
$\frac{p}{\hbar k}$